Fuzzy Logic Controller-Based BLDC Motor Drive

Kishore Kumar Pedapenki, Jayendra Kumar, and Anumeha

1 Introduction

BLDC motor is an ideal motor for applications of low and medium power because of its high torque/inertia ratio, high efficiency, high energy density, wide range of speed control, low maintenance requirement. It is a three-phase synchronous motor with permanent magnets on the rotor and three phase windings on the stator. It is also known as an electronically switched motor because there are no mechanical brushes and commutator assembly, instead an electronic commutation is used based on the position of the rotor sensed by the Hall-effect position sensor. Applications can be found in a broad range of household appliances, office automation I and industrial I instruments, ventilation, automotive, air conditioning and many more.

Most widely used controller for speed control of any motor drive is proportional-integral (PI) controller. Due to its robust performance over a wide range of operating conditions and functional simplicity, the PI controller is extremely popular. Using PI controller, motor drive is controlled because it is used to reach speed accurately and decreases steady state error. Because of speed response of the drive is sluggish using this controller which is due to integral portion of the controller. Since PI controller doesn't have the ability to predict the future errors of the system, therefore, it cannot eliminate steady state oscillations and reduces settling time. Fuzzy logic has rapidly become one of the most successful of today's technology for developing sophisticated

K. K. Pedapenki (✉)
Jain Deemed-to-be University, Bangalore, India
e-mail: iitr.kis@gmail.com

J. Kumar
National Institute of Technology Jamshedpur, Jamshedpur, India
e-mail: jkumar.ece@nitjsr.ac.in

Anumeha
Government Women's Polytechnic Jamshedpur, Jamshedpur, India

© The Author(s), under exclusive license to Springer Nature Singapore Pte Ltd. 2021

J. Kumar and P. Jena (eds.), *Recent Advances in Power Electronics and Drives*, Lecture Notes in Electrical Engineering 707,
https://doi.org/10.1007/978-981-15-8586-9_34

control systems. Several studies show, both in simulations and experimental results, that fuzzy logic control yields superior results with respect to those obtained by conventional control algorithms. Thus, in industrial applications, the fuzzy logic control has become an attractive solution in controlling the electrical motor drives. Fuzzy logic controller [1] is one of the promising controllers [2] in shunt active power filters [3] also. The hardware setup based on the fuzzy logic was also developed in this area of shunt active power filter [4]. In this paper, a simulation model with the fuzzy logic controller with zeta converter is presented using MATLAB/Simulink.

2 Zeta Converter

The power factor corrected (PFC) zeta converter [5–7] is a fourth-order DC-DC converter that works in both discontinuous and continuous current conduction mode as shown in Fig. 1. It operates as a buck boost feature that is not inverted output voltage.

Steady State Analysis [8]

Using inductor [9, 10] volt-sec balance equation, the relationship between input and output voltage can be obtained as shown in Fig. 2a, b.

Let the switch Q is ON for a period of DT in the total period of T.

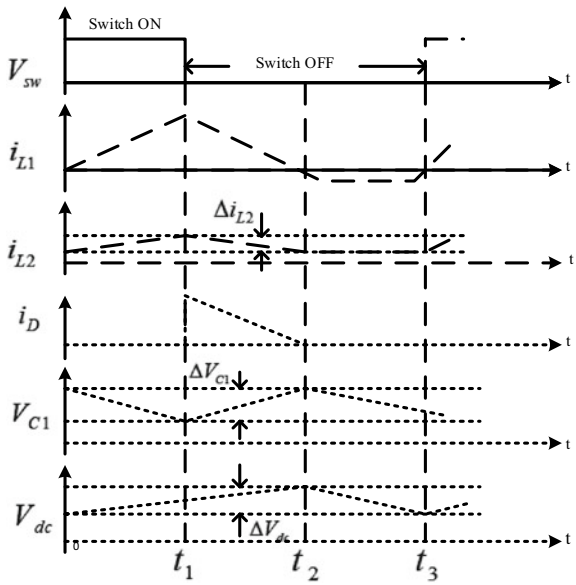

Fig. 1 Wave forms of Zeta PFC converter

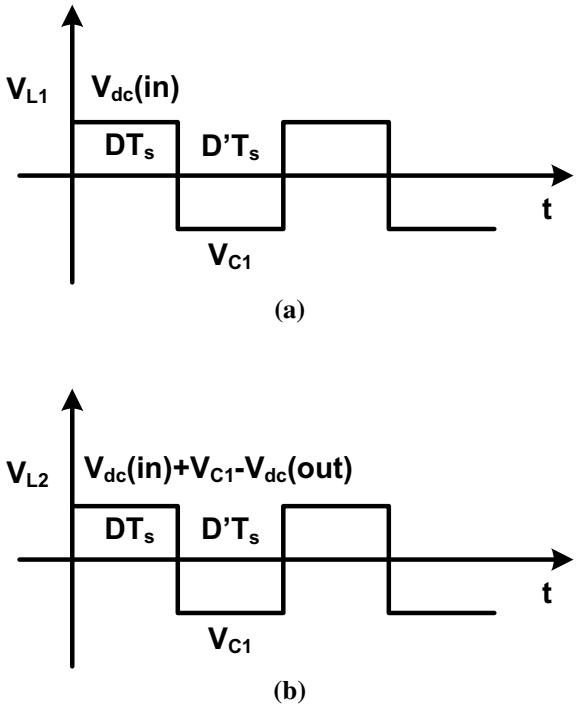

Fig. 2 **a** Voltage across inductor L_1 [21]. **b** Voltage across inductor L_2 [22]

Inductor volt-sec balance equation:

$$V_{\mathrm{dc(in)}} D T_s - V_{C1} D^1 T_s = 0 \tag{1}$$

$$V_{\mathrm{dc(in)}} D T_s = V_{C1} D^1 T_s \tag{2}$$

$$V_{C1} = \frac{V_{\mathrm{dc(in)}} D}{D^1} \tag{3}$$

From Fig. 4b,

$$(V_{\mathrm{in(dc)}} + V_{C1} - V_{\mathrm{dc(out)}}) D T_s - V_{\mathrm{dc(out)}} D^1 T_s = 0 \tag{4}$$

$$(V_{\mathrm{in(dc)}} + V_{C1} - V_{\mathrm{dc(out)}}) D T_s = V_{\mathrm{dc(out)}} D^1 T_s$$

$$V_{C1} = \frac{V_{\mathrm{dc(out)}}}{D} - V_{dc(\mathrm{in})} \tag{5}$$

From the Eqs. (5) and (6)

$$\frac{V_{\mathrm{dc(out)}}}{D} - V_S = \frac{V_{\mathrm{dc(in)}} D}{D^1} \tag{6}$$

$$\frac{V_{\mathrm{dc(out)}}}{D} = V_{\mathrm{dc(in)}} + \frac{V_{\mathrm{dc(in)}} D}{D^1} \tag{7}$$

$$V_{\mathrm{dc(out)}} = \frac{V_{\mathrm{dc(in)}} D}{(1 - D)} \tag{8}$$

$$\frac{D}{1 - D} = \frac{V_0}{V_{\mathrm{in}}} = \frac{I_{\mathrm{in}}}{I_0} \tag{9}$$

The duty cycle of the zeta converter is given by

$$D = \frac{V_{\mathrm{dc(out)}}}{V_{\mathrm{dc(out)}} + V_{\mathrm{dc(in)}}} \tag{10}$$

3 Fuzzy Logic Controller (FLC)

Fuzzy logic control (FLC) [11] is a control algorithm based on a linguistic control strategy which tries to account the human knowledge about how to control a system without requiring a mathematical model. Input and output are non-fuzzy values. The block diagram of the FLC is shown in Fig. 3 and the calculated value of parameter expression used in this work is in Table 1.

The Fuzzy Logic Controller [12] has two input signals, i.e. the error E and the change in error CE [13]. The change in error is related to the derivative of error ($\mathrm{d}E/\mathrm{d}t$). The controller observes the pattern of the speed loop error signal and correspondingly updates the output, so that actual speed matches the command speed reference [14].

Fuzzification: Fuzzification is the controller's first block, which converts each piece of input data into membership degrees through a lookup into one or more membership functions.

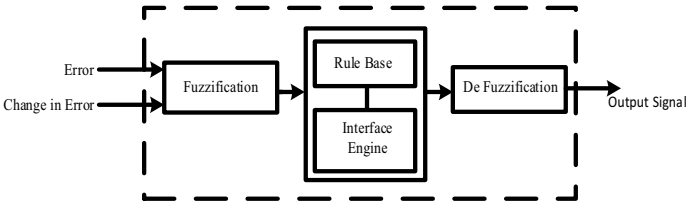

Fig. 3 Block diagram of FLC

Table 1 Parameter expressions and their values used in this work

S. no.	Parameter expression	Calculated values
1	$L_1 = \frac{V_s^2}{2P_{\max} f_s}\left(\frac{V_{\text{dc max}}}{V_{\text{dc max}}+\sqrt{2}V_s}\right)$	1.29 mH
2	$C_1 = \frac{P_{\max}}{\eta\left(\sqrt{2}V_s+V_{\text{dc max}}\right)^2 f_s}$	423.06 nF
3	$L_o = \frac{V_s^2}{P_{\max}} \frac{V_{\text{dc max}}}{\lambda f_s(\sqrt{2}V_s)}\left(\frac{V_{\text{dc max}}}{V_{\text{dc max}}+\sqrt{2}V_s}\right)$	3.89 mH
4	$C_{\text{dc}} = \frac{P_{\min}}{2\omega k V_{\text{dc min}}^2}$	5 mF
5	$C_{f\max} = \frac{I_m}{\omega_L V_m} \tan\theta$	378 nF
6	$L_f = \frac{1}{4\Pi^2 f_c{}^2 C_f}$	1.03 mH

Table 2 Rule base of FLC

E/CE	NH	NM	NL	Z	PL	PM	PH
NH	NH	NH	NH	NH	NM	NL	Z
NM	NH	NH	NH	NM	NL	Z	PL
NL	NH	NH	NM	NL	Z	PL	PM
Z	NH	NM	NL	Z	PL	PM	PH
PL	NM	NL	Z	PL	PM	PH	PH
PM	NL	Z	PL	PM	PH	PH	PH
PH	Z	PL	PM	PH	PH	PH	PH

Rule ibase: The rules may use multiple variables in both the status and the rule conclusion. Therefore, the controllers can be applied to both single-input single-output (SISO) issues and multi-input multi-output (MIMO) issues. The rule base used in this work is in Table 2.

Membership ifunctions:

Every element in the universe of discourse is a member of a fuzzy set to some grade, perhaps even zero. The grade of membership for all its members describes a fuzzy set, such as neg. A grade of membership functions is allocated in fuzzy sets components, so the shift from membership to non-membership is more gradual than abrupt.

Defuzzification: [15]

Defuzzification is the process of converting a fuzzified output into a single crisp value with respect to a fuzzy set. The defuzzified value in fuzzy logic controller (FLC) represents the action to be taken in controlling the process.

4 Method and Result Analysis

This motor control drive consists of diode bridge rectifier, dc filter, Zeta converter, voltage sourced inverter, BLDC motor [16, 17]. Zeta converter [18] is fed from the rectifier output through dc filter. The single-phase AC supply is fed to the rectifier to convert AC to DC. The rectifier output, i.e. DC consist of harmonics when it is converted from AC to DC. So, DC filter can be used to limit the harmonic content and provide filtered dc voltage which is given as input to the zeta converter. As discussed in earlier section, Zeta converter [19] is well suited for power factor improvement [20] compared to boost converter and having buck boost capability.

Zeta converter is used to control the dc link voltage which is given as input to the VSI fed BLDC motor. The dc link voltage is controlled by varying the switching pulses of Zeta converter, which are generated by the using Fuzzy Logic Controller. The controlled dc link voltage from zeta converter is used to drive the BLDC motor through voltage sourced inverter. The Position tracking of the rotor is converted into respective emf signal using Hall sensors. A Hall sensor is used to give gating signals to voltage source inverter with respect to rotor position tracking. This way Hall sensor is used to control the gate pulses from the position tracking of the BLDC motor drive. The VSI is operated at the fundamental frequency switching is accomplished by the electronic commutation of the BLDC motor. The same is shown in Fig. 4 above.

The speed of the BLDC motor drive is compared with the reference speed. The error speed signal is given to Fuzzy Logic Controller with rule base shown in Table 2. The processing signal of FLC is compared with the sawtooth signal to get the switching pulses to the switch of Zeta converter. MOSFET is used for switch in

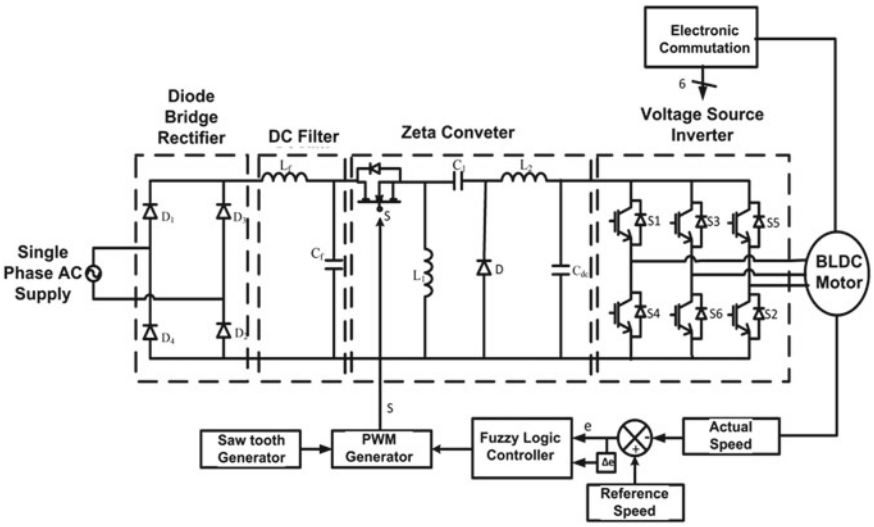

Fig. 4 Proposed Zeta PFC converter-based BLDC motor drive with fuzzy logic controller

the Zeta converter because of it is having a capability of higher switching frequency. By controlling the duty cycle of switch, DC link voltage of the zeta converter is controlled. By controlling the DC link voltage of the Zeta converter, speed of the BLDC motor is controlled. Figures 5, 6, 7 and 8 show the DC link voltage, speed of the BLDC motor, stator current and electromagnetic torque respectively using PI controller, whereas the same parameters using fuzzy logic controller (FLC) have been shown in Figs. 9, 10, 11 and 12 The comparison of the PI and FLC is shown in Table 3.

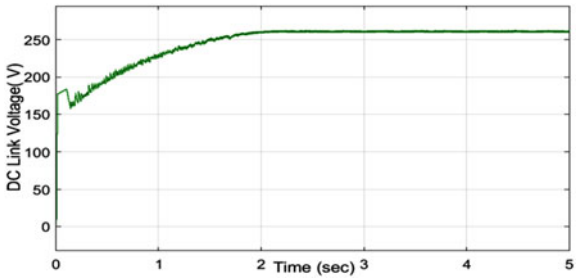

Fig. 5 DC link voltage (V) using PI controller

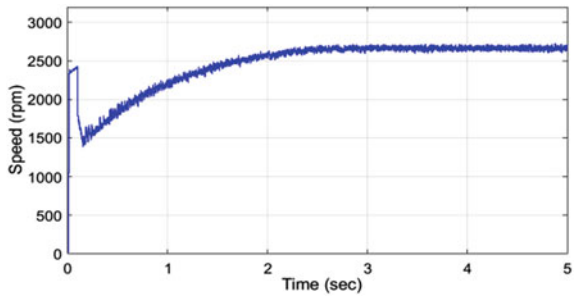

Fig. 6 Speed response using PI controller

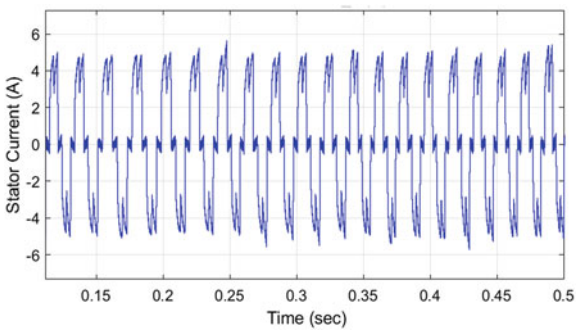

Fig. 7 Stator current using PI controller

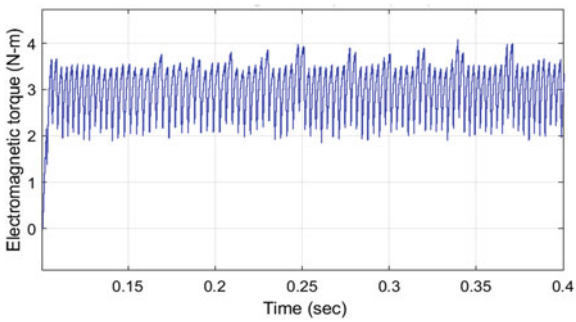

Fig. 8 Electromagnetic torque using PI controller

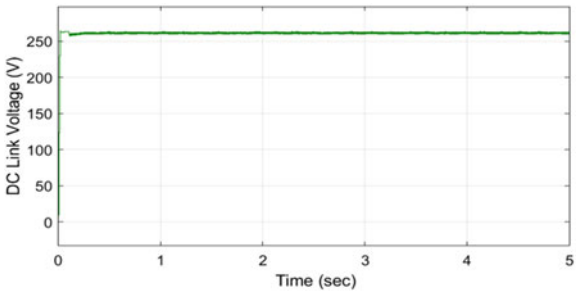

Fig. 9 DC link voltage (V) using FLC

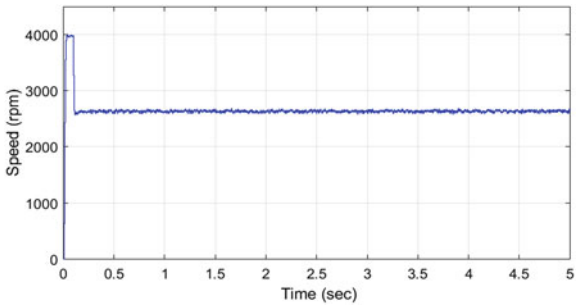

Fig. 10 Speed response using FLC

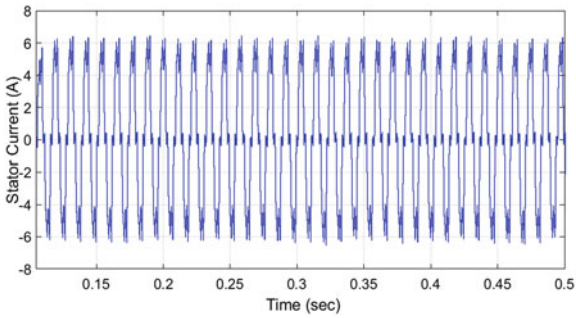

Fig. 11 Stator currents using fuzzy logic controller

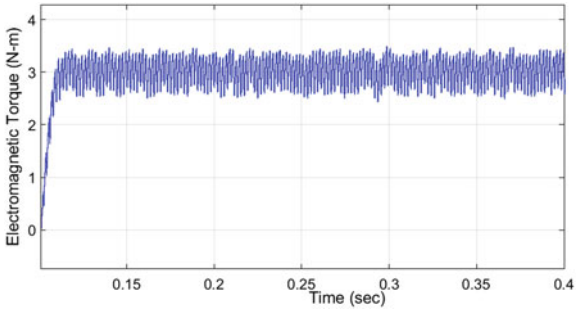

Fig. 12 Electromagnetic torque using fuzzy logic controller

Table 3 Comparison of parameters obtained: PI and fuzzy logic controller

Parameters	PI controller	Fuzzy logic controller
Power factor	0.918	0.986
Settling time(in sec)	2.1	0.2
Rise time (in sec)	2.4	0.08
Voltage ripple (in V)	2.5	2.5

5 Conclusion

The proposed Zeta converter-based BLDC motor drive using Fuzzy Logic Controller has designed and simulated in MATLAB/Simulink. This work presents a comparative analysis of speed control of brushless DC motor (BLDC) drive fed with voltage source inverter (VSI) with PI Controller and Fuzzy Logic Controller. The main objective of this work is to control the speed response of BLDC motor drive which is achieved by Fuzzy Logic Controller. For the speed control of BLDC drive, zeta converter is preferred over boost converter. Because of the zeta converter has the capability of buck-boost and better power factor improvement is achieved for this proposed work. Speed response of BLDC drive using PI controller is having rise time higher and high settling time. So compared to PI controller-based BLDC motor, fuzzy logic controller-based BLDC motor given low rise time and faster speed response and improved Power Factor. The speed response of BLDC drive is compared by both controllers which are simulated in MATLAB/Simulink.

References

1. K.K. Pedapenki, S.P. Gupta, M.K. Pathak, Two controllers for shunt active power filter based on fuzzy logic, in *IEEE International Conference on Research in Computational Intelligence and Communication Networks (ICRCICN)* (IEEE, 2015), pp. 141–144
2. K.K. Pedapenki, S.P. Gupta, M.K. Patha, Comparison of fuzzy logic and neuro fuzzy controller for shunt active power filter, in *International Conference on Computational Intelligence and Communication Networks (CICN)* (IEEE, 2015), pp. 1247–1250

3. K.K. Pedapenki, G. Swathi,, Analysis of shunt active power filter with unit voltage template method, in *International Conference on Computation of Power, Energy Information and Communication (ICCPEIC)* (IEEE, 2018), pp. 749–753
4. K.K. Pedapenki, S.P. Gupta, M.K. Pathak, Shunt active power filter with MATLAB and dSPACE 1104 verification. Int. J. Appl. Eng. Res. **11**(6), 4085–4090 (2016)
5. B. Singh, V. Bist, Power quality improvements in a zeta converter for brushless DC motor drives. IET Sci. Meas. Technol. **9**(3), 351–361 (2015)
6. V. Bist, B. Singh, A brushless DC motor drive with power factor correction using isolated-zeta converter. IEEE Trans. Indus. Inf. **9**(2), 1–6 (2014)
7. S. Singh, B. Singh, G. Bhuvaneswari, V. Bist, Power factor corrected zeta converter based improved power quality switched mode power supply. IEEE Trans. Indus. Electron. **62**(9), 5422–5433 (2015)
8. R. Kumar, B. Singh, BLDC motor-driven solar PV array-fed water pumping system employing zeta converter. IEEE Trans. Ind. Appl. **52**(3), 2315–2322 (2016)
9. C.C. Shijith, S. Shijith, PFC and speed control of BLDC motor using zeta converter. Int. J. Adv. Res. Electr. Electron. Eng. **2**(2), 52–58 (2014)
10. M. Vimal, V. Sojan, Vector controlled PMSM drive with power factor correction using zeta converter, in *International Conference on Energy, Communication, Data Analytics and Soft Computing* (IEEE, 2017), pp. 289–295
11. T. Mathew, C. Ann Sam C, Closed loop control of BLDC motor using a fuzzy logic controller and single current sensor, in *International Conference on Advanced Computing and Communication Systems (ICCACC)* (IEEE, 2013), pp. 1–6
12. A. Maamoun, Y.M. Alsayed, A. Shaltout, Fuzzy logic based speed controller for permanent magnet synchronous motor drive, in *IEEE International Conference on Mechatronics and Automation* (IEEE, 2013), pp. 1518–1522
13. H.M. Kamel, H.M. Hasanien, H.E.A. Ibrahim, Speed control of permanent magnet synchronous motor using fuzzy logic controller, in *IEEE International Electric Machines and Drives Conference* (IEEE, 2009), pp. 1587–1591
14. G. Dewantoro, Y.L. Kuo, Robust speed-controlled permanent magnet synchronous motor drive using fuzzy logic controller, in *IEEE International Conference on Fuzzy Systems* (IEEE, 2011), pp. 884–888
15. C.W. Tao, J.S. Taur, Design of fuzzy-learning fuzzy controllers, in *IEEE International Conference on Fuzzy Systems Proceedings IEEE World Congress on Computational Intelligence*, (IEEE, 1998), pp. 416–421
16. K. Sreeram, Design of fuzzy logic controller for speed control of sensor less BLDC motor drive, in *International Conference on Control, Power Communication and Computing Technologies* (IEEE, 2018), pp. 18–24
17. N.N. Baharudin, S.M. Ayob, Brushless DC motor drive control using single input fuzzy PI controller, in *IEEE Conference on Energy Conversion (CENCON)* (IEEE, 2015), pp. 13–18
18. B. Singh, V. Bist, A single sensor-based PFC Zeta converter FED BLDC motor drive for fan applications, in *IEEE Fifth Power India Conference* (IEEE, 2012), pp. 1–6
19. S. Singh, B. Singh, Voltage controlled PFC Zeta converter based PMBLDCM drive for an air-conditioner, in *5th International Conference on Industrial and Information Systems* (IEEE, 2010), pp. 550–555
20. B. Singh, S. Singh, Isolated Zeta PFC converter-based voltage controlled PMBLDCM drive for air-conditioning application, in *India International Conference on Power Electronics*, (IEEE, 2011) pp. 1–5
21. E.G. Janardhan, *Special Electrical Machines* (PHI publications, 2007)
22. J. Jantzen, *Design of Fuzzy Controllers* (Wiley Press, Beijing, 1999)